Revision Notes.				
R1 -				
APA: -	Drawn: -	Checked: -	Approved: -	Date: -

VIEW A

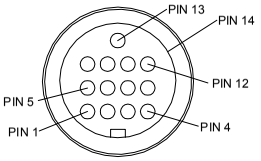

13 PIN FEMALE
MATING FACE

INPUT

PIN #	WIRE COLOUR	DESCRIPTION
1	-	-
2	ORANGE	VIDEO CA1
3	RED	12 / 24V INPUT
4	-	-
5	PALE RED	+12V CA2
6	-	-
7	PURPLE	TRIG CA2
8	BLUE	AUDIO CA1
9	BROWN	TRIG CA1
10	YELLOW	VIDEO CA2
11	BLACK	+12 CA1
12	GREY	AUDIO CA2
13	-	-
14	SHEILD	GROUND

VIEW B

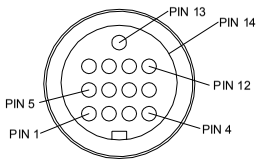

13 PIN FEMALE
MATING FACE

OUTPUT

PIN #	WIRE COLOUR	DESCRIPTION
1	RED	+12/24V
2	BROWN	TRIG 3
3	-	-
4	PURPLE	TRIG 1
5	PALE RED	CA1 +12V OUT
6	GREY	CA1 AUDIO
7	YELLOW	CA1 VIDEO
8	-	-
9	-	-
10	-	-
11	BLACK	CA3 +12V OUT
12	BLUE	CA3 AUDIO
13	ORANGE	CA3 VIDEO
14	SHEILD	GROUND

VIEW A-A
CABLE BUILDUP

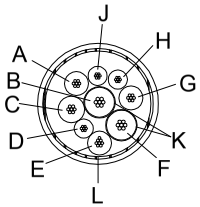

	WIRE COLOUR	AWG
A	RED	26
B	YELLOW	26
C	BLACK	28
D	BROWN	30
E	BLUE	28
F	ORANGE	26
G	PALE RED	26
H	GREY	30
J	PURPLE	30
K	COPPER SHIELD	30
L	ALUMINIUM FOIL PAPER	

PIN OUT TABLE

OUTPUT	1	2	3	4	5	6	7	8	9	10	11	12	13	SHIELD
INPUT	3	9	-	7	5	12	10	-	-	-	11	8	2	SHIELD
COLOUR	A	D	-	J	G	H	B	-	-	-	C	E	F	K

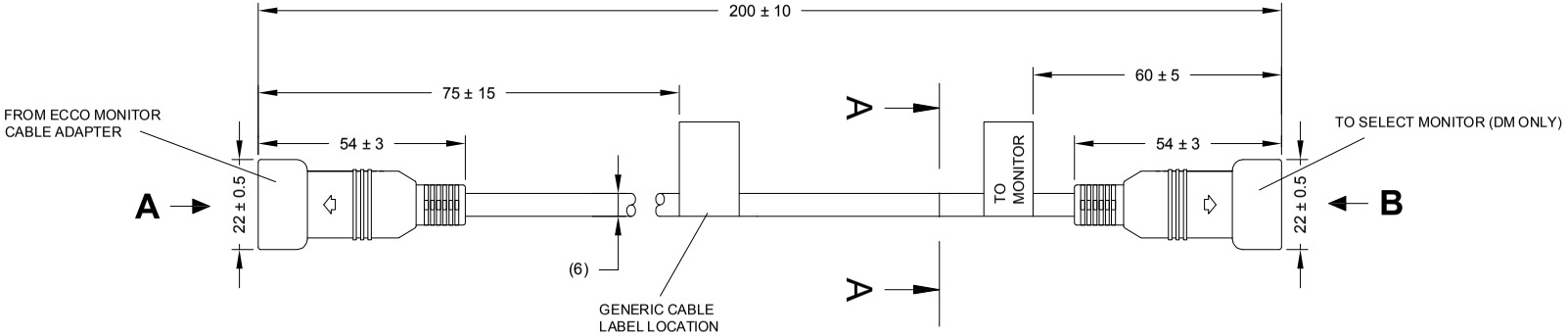

NOTES:
1. FOR CABLE LABEL REFER TO LATEST REVISION OF DRAWING BE-001500-XX-11.
2. FOR GIFTBOX LABEL REFER TO LATEST REVISION OF DRAWING BE-002144-XX-12.
3. CABLE ORIENTATION LABEL (TO MONITOR) MUST BE WHITE WITH BLACK INK AND CONTAIN DETAIL SHOWN ON THIS DRAWING.

PROPRIETARY NOTICE
THIS DESIGN AND TECHNICAL INFORMATION APPEARING ON THIS DRAWING IS THE PROPERTY OF BRIGADE ELECTRONICS, AND IS DISCLOSED IN CONFIDENCE. IT IS NOT TO BE COPIED, REPRODUCED, REVEALED TO OR EXPROPRIATED BY OTHERS, EITHER IN WHOLE OR IN PART WITHOUT THE EXPRESS WRITTEN CONSENT OF BRIGADE ELECTRONICS.

BRIGADE®
www.brigade-electronics.com

Assembly Pl Approval Xinyu Huang 15.04.13	Approved by S.MATTHEWS	Checked by R.BATES	Drawn by M.POTTER
Angle of Projection	Units mm	Scale N/A	Released 16.04.13	Assembly Ref 375-4
Third Angle	Status RELEASED	AC-053	
	Part No 4339	BE-002262-00-13	

FrameV2